SIERRA PACIFIC WINDOWS

Westchester Double Hung Operating Window
36" x 84" Overall Frame Size
Nail Fin Installation / Non-Impact

CCL Listing# 436-H-689.08-11	ELEMENT TEST REPORT #: **ESP032826P-2529.13**

Westchester Double Hung Operating Window
Nail Fin Installation / WDMA Instructions / Non-Impact

SHEET: 1 OF 2		UPDATED: 4/06/2020	DRAWN BY: A.H.

TEST REPORT SUMMARY:
MAXIMUM BASIC UNIT FRAME SIZE:
36" (914mm) x 84" (2134mm)

- OVERALL DESIGN PRESSURE: **+60.15/-65.16 psf**
- STRUCTURAL TEST PRESSURE: **+90.23/-97.74psf**
- RATING: **LC-PG50**

INSTALLATION NOTES:

1. USE 2" x _ PINE FOR WOOD BUCK
- PLACE WOOD SHIMS EVERY 6-10"

2. 1/4" MAXIMUM SHIM SPACE AT HEAD, SILL & EACH JAMB

3. APPLY A CONTINUOUS BEAD OF SEALANT BETWEEN THE INTEGRAL VINYL NAIL FIN AND THE BUCK AT THE HEAD, SILL AND SIDE JAMBS TO SECURE INTEGRAL VINYL NAIL FIN TO FRAMING MATERIAL

4. INSTALL #8 X 1-1/4" PPH SCREWS SPACED APPROXIMATELY 2-4" FROM EACH CORNER AND 6" ON CENTER AT THE HEAD AND SIDES THROUGH THE ALUMINUM NAILING FLANGE, AND 4" ON CENTER AT THE SILL THROUGH THE INTEGRAL VINYL NAIL FIN INTO THE FRAMING MATERIAL; 3/8" MIN EDGE DISTANCE

5. 1" MINIMUM FASTENER EMBEDMENT INTO FRAMING MATERIAL
SILICONE SEAL OVER SCREW HEADS

6. MAXIMUM OVERALL BASIC UNIT WINDOW SIZE:
48" (1219mm) x 108" (2743mm)

GENERAL INSTALLATION NOTES:
- Check rough opening for proper size, plumb, level and square.
- Make all necessary adjustments to ensure rough opening is plumb, level & square.
- Sill must be flat, level and capable of supporting the weight of the unit.
- Opening should allow a maximum of 1/4" shim space at head, sill and each jamb.
- Consult full installation instructions found on the Sierra Pacific web site, www.sierrapacificwindows.com, for all recommended installation procedures.
- Wood buck, framing, fasteners, sealant and all wall system materials are provided by others

FLASHING:
- For units that have to meet a specific DP (Design Pressure) rating, any kind of building wrap must be folded and taped away from each rough opening before the unit is installed. Unit must come in contact with the building's bare sheathing. A bead of silicone must be applied to the backside of the nail fin where it meets the unit, at head and jambs.
- Once unit is installed and flashed properly, untape the building wrap and trim flush with the unit's exterior. A bead of sealant must be placed along the seam joint of the building wrap and the unit. Tape the corner cuts in the building wrap. See full window installation brochure for complete flashing details.

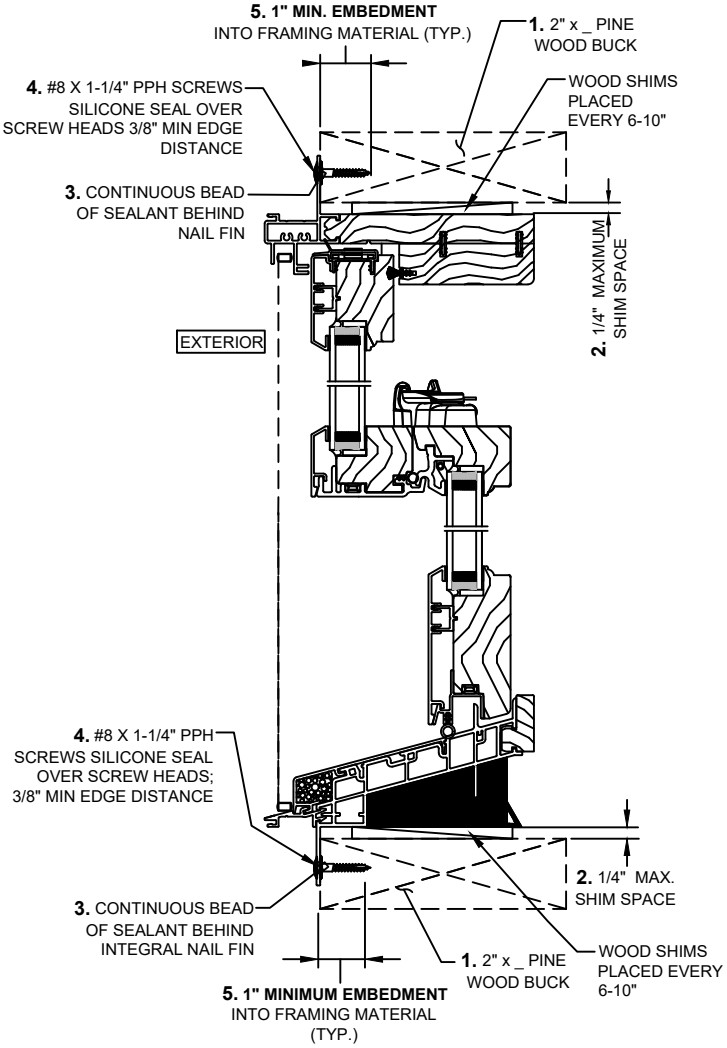

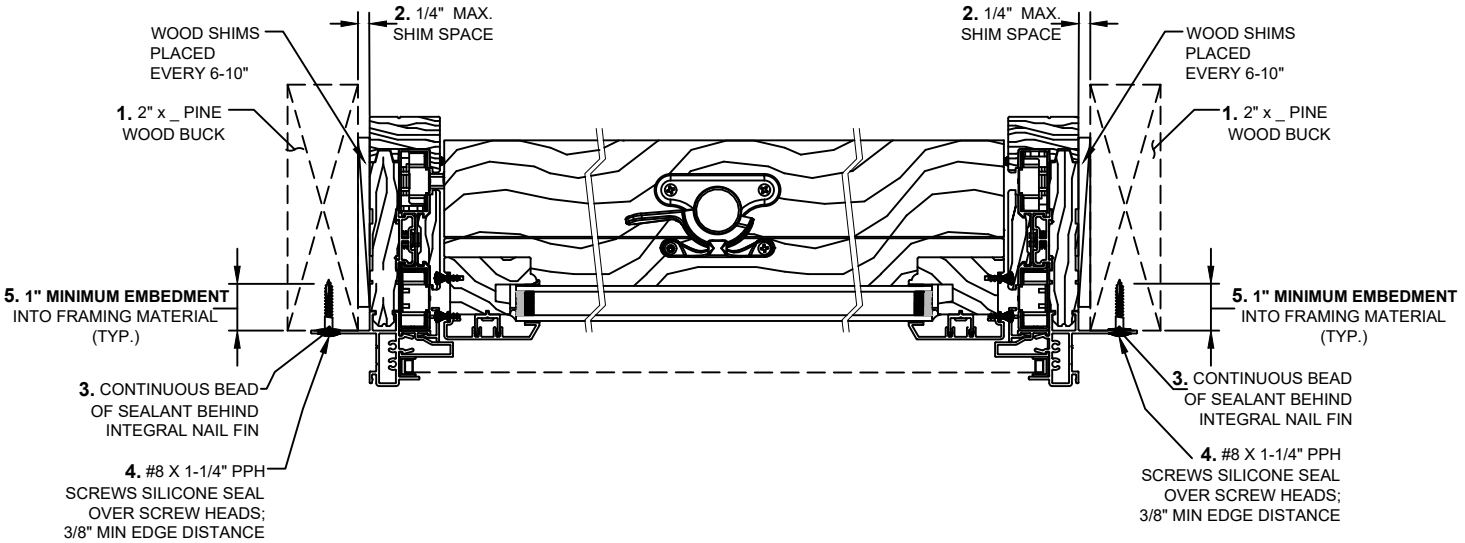

Installation requirements may vary in particular locations and in other types of construction. Proper installation is essential, and Sierra Pacific Windows, recommends consultation with an AAMA Certified Installer, or other qualified, registered building professional before installation of any Sierra Pacific product. Proper installation of Sierra Pacific products is the responsibility of the installer. Sierra Pacific is not responsible for proper installation. Sierra Pacific is not responsible for the design of, conditions in, or performance of building construction beyond the perimeters of the Sierra Pacific units. Sierra Pacific is not responsible for proper integration of the Sierra Pacific units with the weather-repellent systems of the building.

SIERRA PACIFIC WINDOWS

Westchester Double Hung Operating Window
36" x 84" Overall Frame Size
Nail Fin Installation / Non-Impact

CCL Listing #436-H-689.11	ELEMENT TEST REPORT #: **ESP032826P-2529.13**

Westchester Double Hung Operating Window
Nail Fin Installation / WDMA Instructions / Non-Impact

SHEET: 2 OF 2		UPDATED: 4/06/2020	DRAWN BY: A.H.

TEST REPORT SUMMARY:
MAXIMUM BASIC UNIT FRAME SIZE:
36" (914mm) x 84" (2134mm)

- OVERALL DESIGN PRESSURE: **+60.15/-65.16 psf**
- STRUCTURAL TEST PRESSURE: **+90.23/-97.74 psf**
- RATING: **LC-PG50**

ELEVATION SHOWING
FASTENER LOCATION & SPACING
(TYP.)

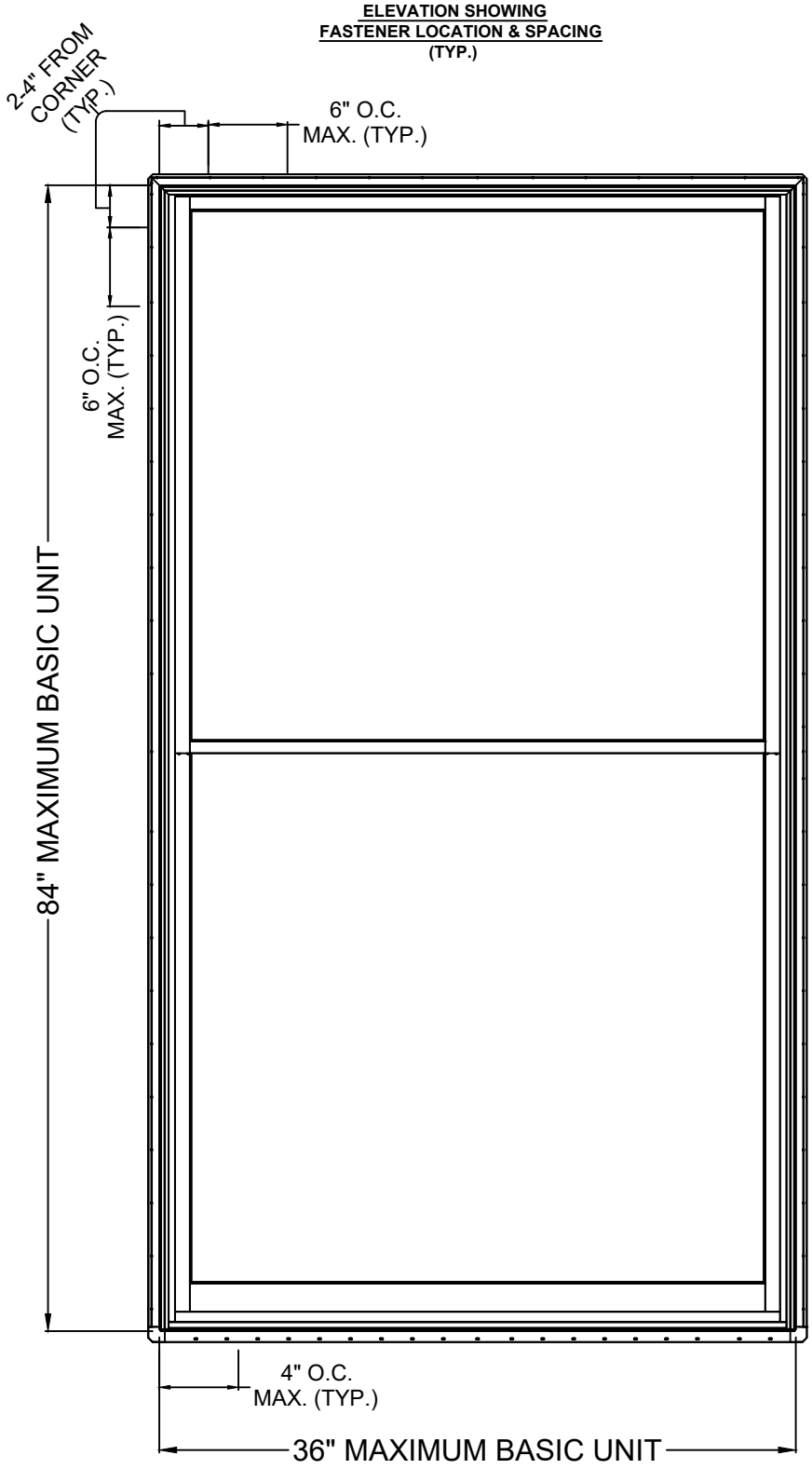

Installation requirements may vary in particular locations and in other types of construction. Proper installation is essential, and Sierra Pacific Windows, recommends consultation with an AAMA Certified Installer, or other qualified, registered building professional before installation of any Sierra Pacific product. Proper installation of Sierra Pacific products is the responsibility of the installer. Sierra Pacific is not responsible for proper installation. Sierra Pacific is not responsible for the design of, conditions in, or performance of building construction beyond the perimeters of the Sierra Pacific units. Sierra Pacific is not responsible for proper integration of the Sierra Pacific units with the weather-repellent systems of the building.